Diritti riservati All rights reserved

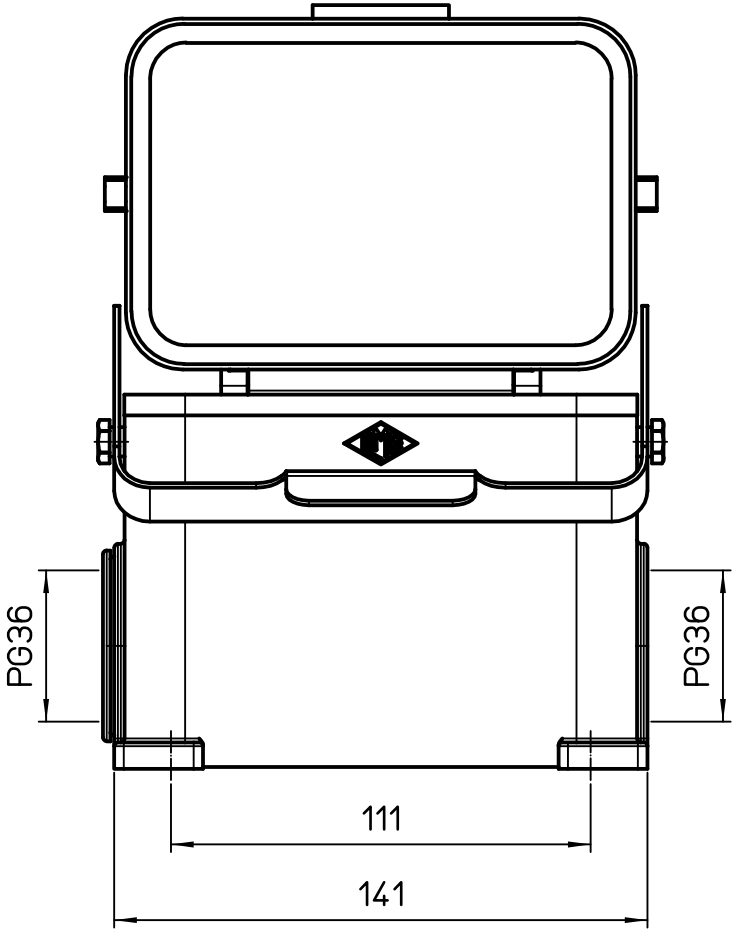

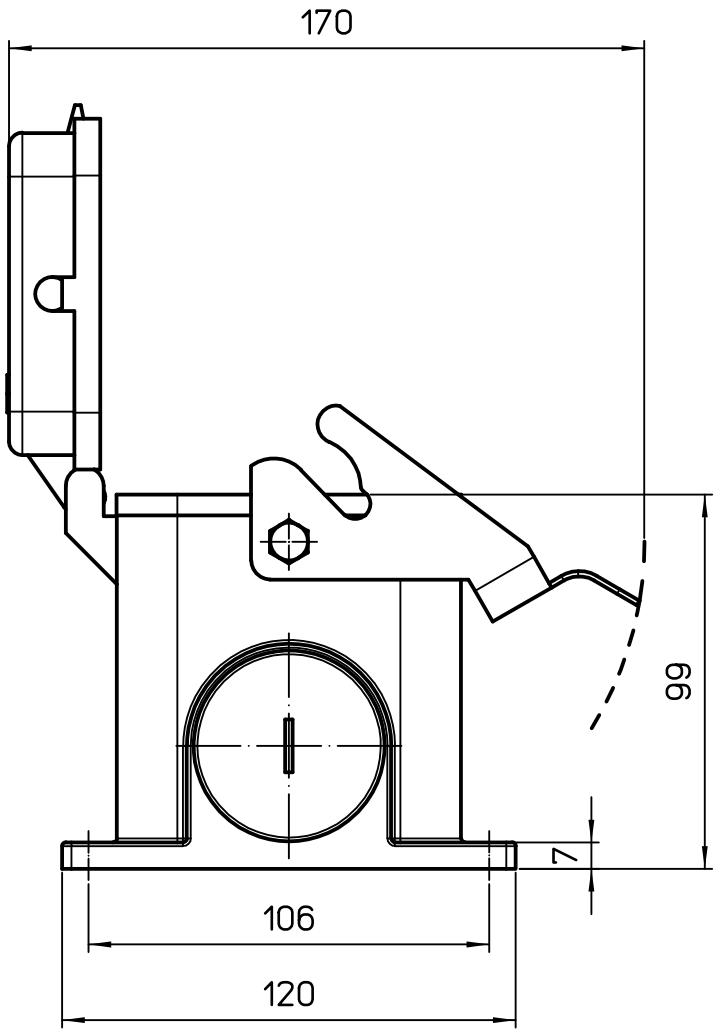

dimensions in mm	JCHP 48 LP36	Scale
Date 28/01/14	Surface mounting housing, 1 lever + plastic cover 2xPG36 -JEI-	1:2
Sign. Radice		